701 PROPOSED 1682' 144CT AERIAL FIBER CABLE / O.D.= .69 INCH / .164 LBS/FT

1031 PROPOSED 436' 144CT AERIAL FIBER CABLE / O.D.= .69 INCH / .164 LBS/FT

81 EXISTING BKMA-200 / O.D.= 1.12 INCH / .71 LBS/FT

82 EXISTING BHAA-200 / O.D.= 1.35 INCH / 1.09 LBS/FT

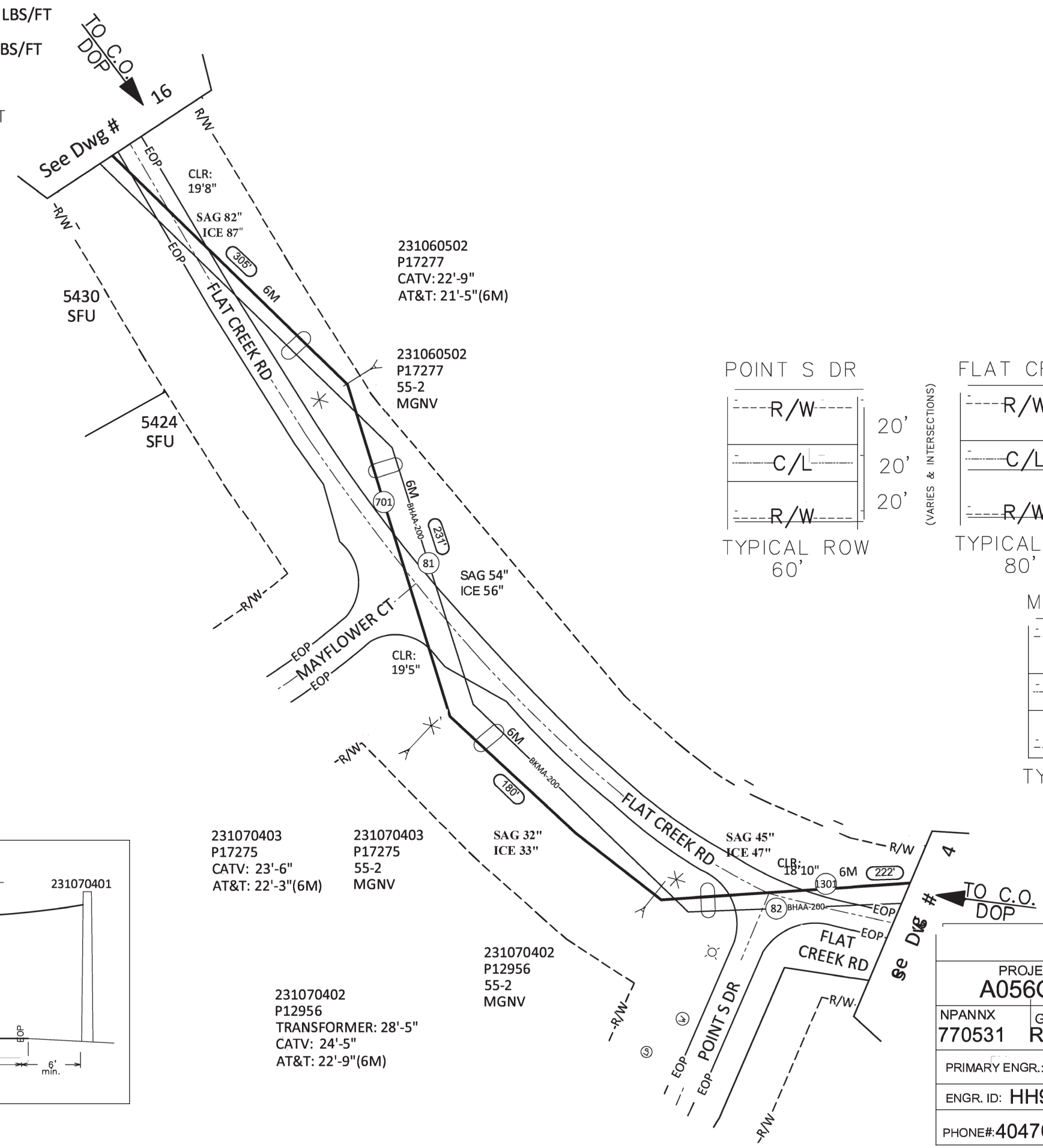

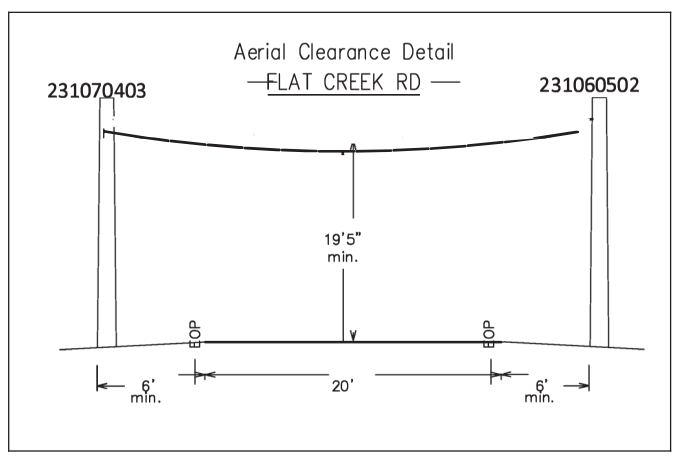

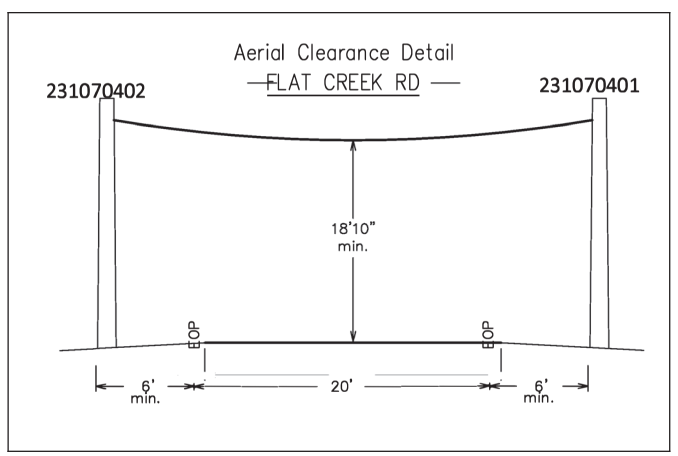

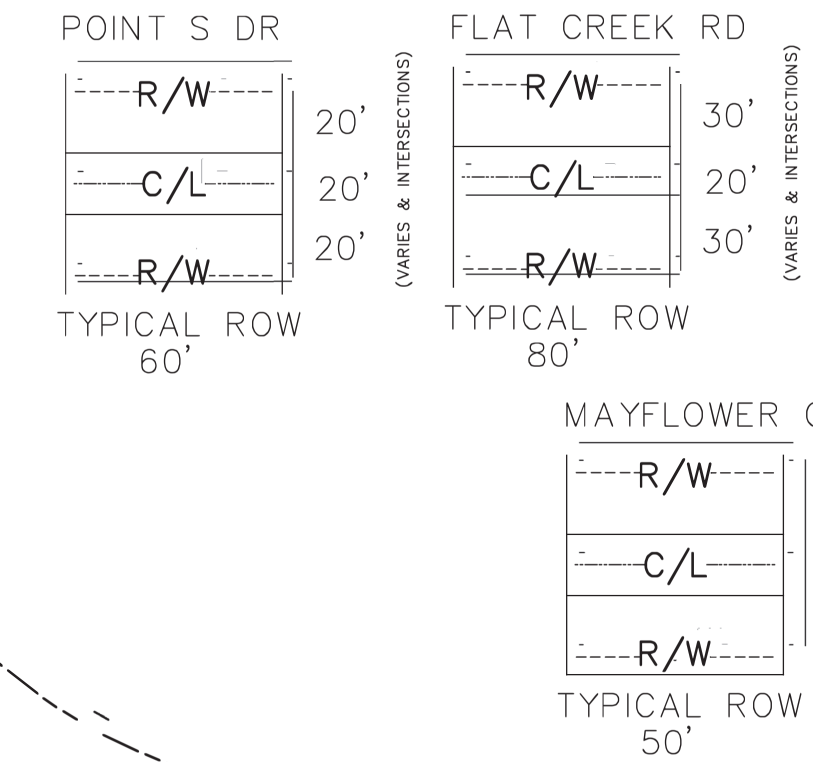

CAUTION:
301V - 15KV TO GRND

JACKSON EMC		
PROJECT# A056GDR		DATE SVC REQ'D 10/30/2025
NPANNX 770531	GEO LOC RE519	CLLI GSVLGAMA
PRIMARY ENGR.: HAMLIN, HUSSAIN		
ENGR. ID: HH993E		PERMIT REQ'D. Y
PHONE#:4047656822		PRINT 3 OF 24

AT&T Proprietary (Internal Use Only.) Not for disclosure outside the AT&T family of companies except under written agreement.